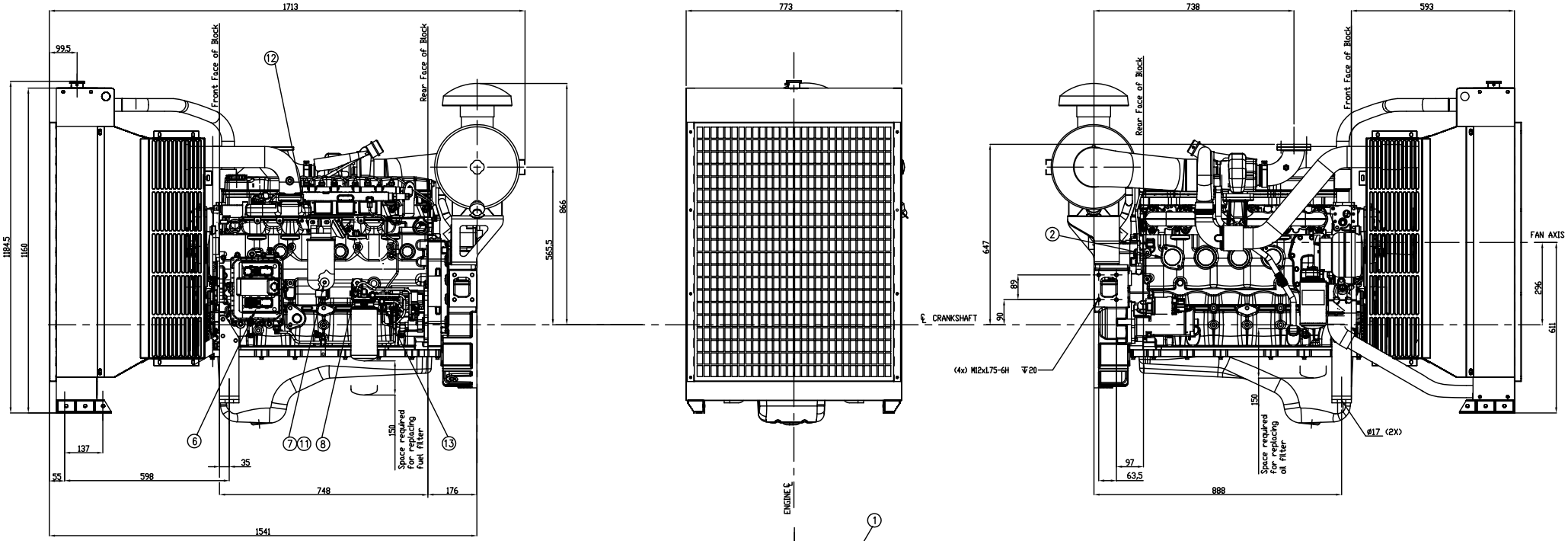

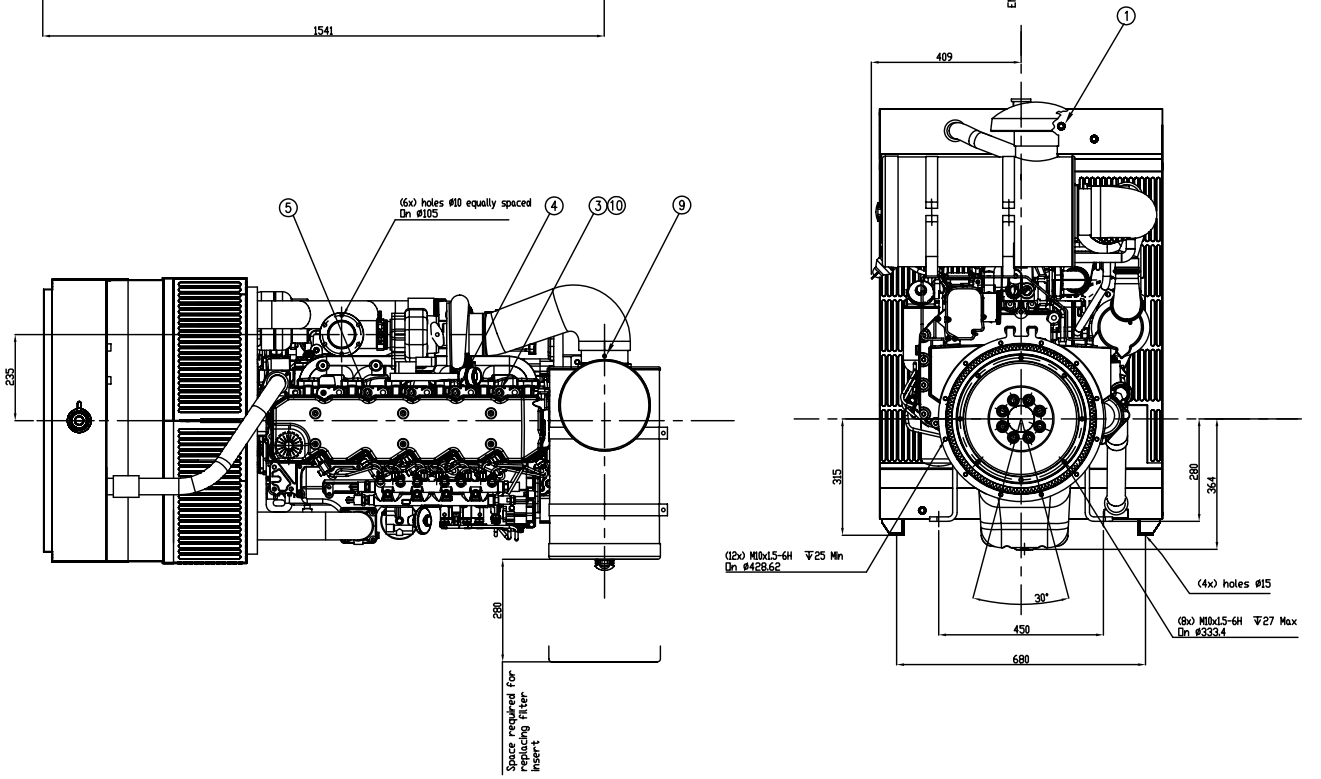

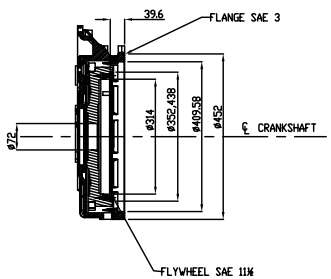

Pos.	Des.	Denomination
13	PIPE ø 8	Fuel return
12	PIPE ø 8	Fuel inlet
11	TBPO+TPO	Low oil pressure + Oil pressure
10	TATA+TTA	Higt water temperature + Water temperature
9	TIFA	Duet load indicator
8	TBPO	Low oil pressure
7	TPO	Oil pressure
6	EDC	EDC connector
5	TS	Water heater resistor switch
4	TATA	Higt water temperature
3	TTA	Water temperature
2	RS	Water heater resistor
1	TBLA	Low water level sensor

CAD DRAWING
HANDLING ON CAD SYSTEM ONLY

Scale 1/5
Date 19-02-2004
Drawn by Del Giudice
Checked by Prestoni
Approved E735
Prescritto generali
Allgemeine Vorschriften
Iveco 2146 B-1999
Iveco 2146 B-2999
Ra ≤ 0,4
Materiale/Werkstoff/Material
Normenbezeichnung/Designation
Code No 184430
Schema Ingombro
Engine for Genset
Materiale/Modell/Model NEF60TE1/NEF60TE2
IVECO
Iveco SpA
No 503111788 DA 62-9710
Sheet 1/1
Origine
Replaced by
Replaced from

Date	Name			
		A2	1-202ACB-123-735	07-09-04 SGM
		A1	1-202ACB-097-735	31-03-04 SGM
		A0	1-202ACB-089-735	02-03-04 SGM

Modifica to grafico ingombro con nuovo flanc