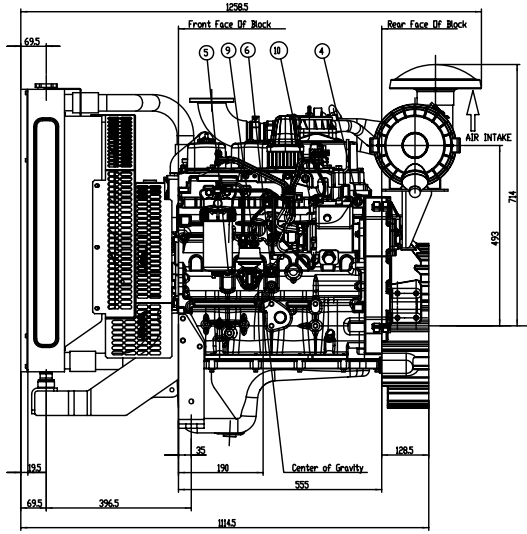

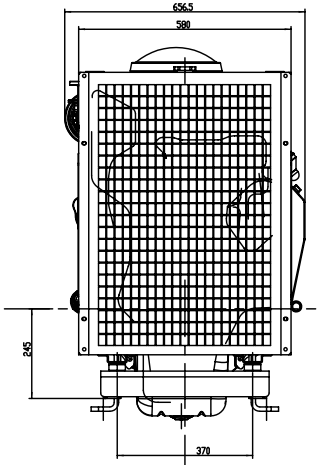

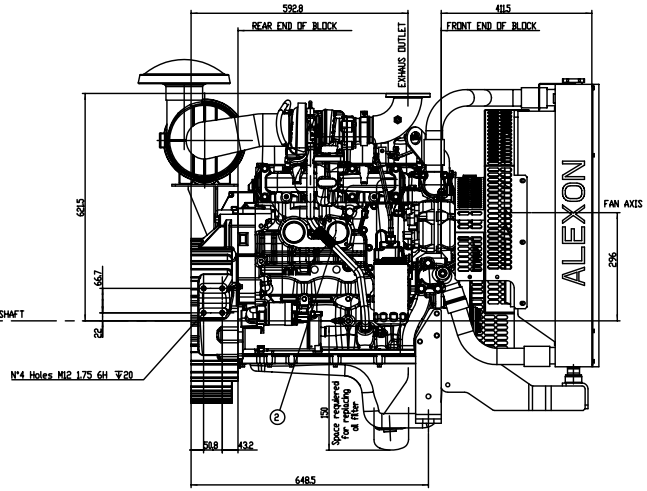

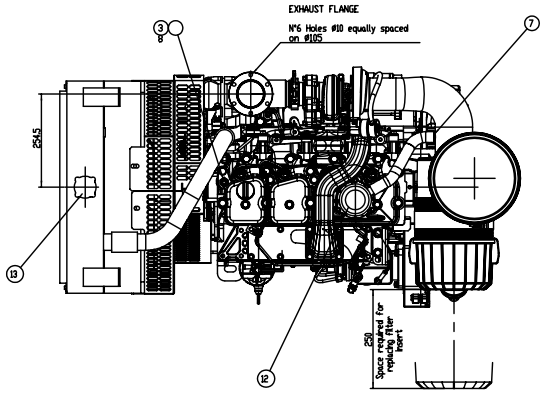

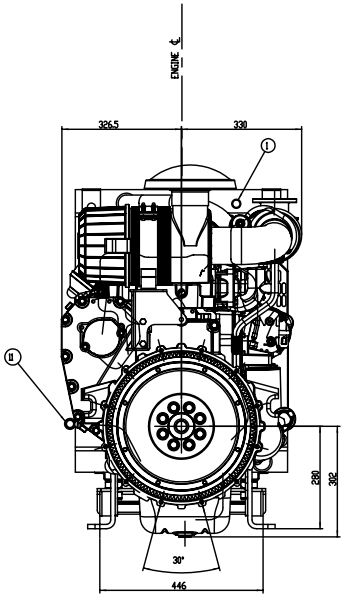

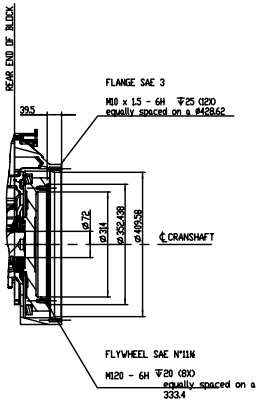

Pos.	Des.	Denomination
13		Water filler cap
12		Oil filler cap
11		Oil Dipstick
10	PIPE#8	Fuel return
9	PIPE#10	Fuel inlet
8	TATA+TTA	Higt water temperature + Water temperature
7	TIFA	Dust load indicator
6	TBPO	Low oil pressure
5	TPO	Oil pressure
4	TS	Water heater resistor switch
3	TATA	Higt water temperature
2	RS	Water heater resistor
1	TBLA	Low water level sensor

NOTE:
Dry Weight 480 Kg

CAD DRAWING
HANDLING ON CAD SYSTEM ONLY

STANDARDS: Pictorial / Orthogonal / Unofficial / Unofficial

Scale / Maßstab / Scala: 15

Iveco Std. D-001

Prescribed general dimensions tolerances Iveco Std. D-2019

	Date	Name
Drawn by	13/07/15	Dal Giudice
Checked by	-	Precisi
Standards	-	Vitali
Approved	E735	Agnesi

Material/Materiale/Material | Standards | Code No

Name (kg) 0.000 | Dr. Process | Sheet-Nr. | Sheet-Nr.

Designation/Denominazione/Designation | Location Code 184430

Schema Ingombro
Engine for Genset

A0	1-202ANG-004-735	13/07/15	DGM	

Date | Name | Sign | Date | Name | Sign | Date | Name | Sign

Model/Modèle/Model: NEF45SM1/SM2

IVECO
Iveco SpA

No. 503112725 D A 62-9710 | Sheet 1/1

Replaced by / Replaced for

Iveco Spa Industrial Vehicles Division. Strada Torino 50, 10156 Torino, Italy. Tel. +39 011 0071111. Fax +39 011 0071999. Copyright 2000 Iveco Spa. All rights reserved. Unauthorized use prohibited. Iveco Spa shall not be liable for any damages arising from the use of any information contained herein, or any partial or complete reproduction or transmission of this document without Iveco Spa's prior written consent.

Customer: 00000000 | Codifier: AUTOR